MERIDIAN

THE ATLAS

# Flagship Drive-Thru Kiosk




Outdoor

Keyboard

Scanner Integration

HD Camera

Payment Ready

Receipt Printer

## Designed for Ordering Experience

Atlas is Meridian's flagship drive-thru kiosk, designed to streamline ordering and enhance the customer experience. A secure payment terminal helps protect customer payment information, while integrated digital menu boards make it easy to present current menu options and promotions.

## Components Available

Proximity Sensor
Temp Controlled
Payment Terminal
WiFi / Cellular
Rugged Keyboard
Barcode Scanner
HD Webcam
Bill Acceptor
Label Printer
Receipt Printer

Display Options



22" 32" 43"

## SCREEN

+ High Definition LED
+ 1920x1080P Resolution
+ 16.9 Aspect Ratio

## Designed in the USA. Controlled End-to-End.

Meridian designs and engineers every solution in-house, with integrated oversight of quality and timelines from concept through completion. OEM solutions available upon request.

MeridianKiosks.com

sales@mzero.com
+1 866.454.6757

MERIDIAN

# The Atlas

## Dimensions (32" Unit)

+ Height: 68.7"
+ Width: 28.25"
+ Depth: 22.31"
+ Base Plate: 28" x 16"
+ Weight: ~260 lbs

Portrait orientation available

## Power

+ 120 Volt | 20 AMP | 50/60 Hz
+ Internal surge protection
+ Power conversion available

## Construction

+ Durable steel enclosure
+ Powder coat finish
+ Tamper-proof security locks
+ Door open detector
+ Front access
+ ADA compliant

## Quality & Certification

AMTIVO ISO 9001:2015 Certified Quality Management

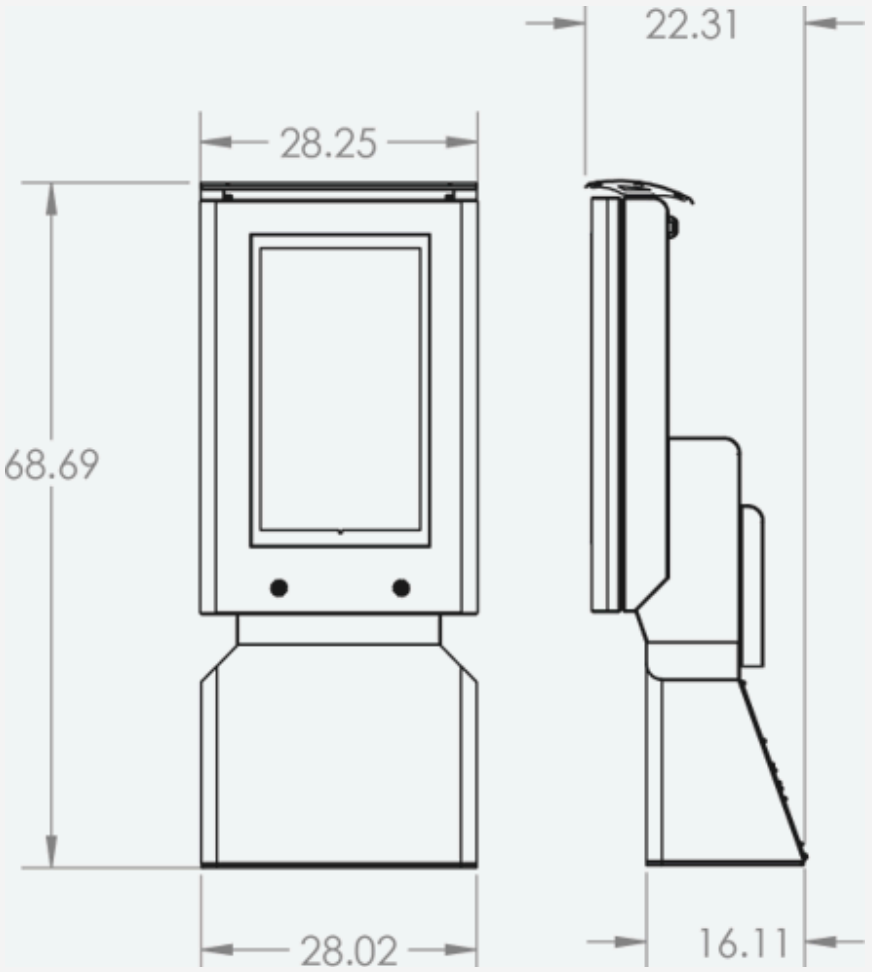


## Finish Options

+ Black | Grey | White
+ Custom Pantone color matching
+ Full-Color Lexan Laminated Graphics

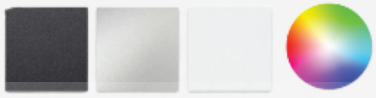

Meridian promises a level of quality that goes beyond expectation. We control every step of the process from concept to completion, overseeing quality, design, cost and timelines.




MeridianKiosks.com | sales@mzero.com | +1 866.454.6757 | OEM