G3 COUNTERTOP

Compact Design Kiosk

MERIDIAN



Maximum Reach. Minimal Footprint.

All the same great features of the G3 Freestanding but in a sleek countertop design. Perfect for office spaces, lobbies, or clinics the G3 Countertop is the innovation for the modern world. The compact design offers users high-quality interactive experience even in areas of limited space.

Components Available

- Keyboard
- Payment Terminal
- Swivel Base
- Barcode Scanner
- WiFi / Cellular
- All-in-One or Mini PC

Display Options



15" and 22" Screen



Keyboard



Barcode Scanner



Payment Terminal



WiFi

Designed in the USA. Controlled End-to-End.

Meridian designs and engineers every solution in-house, with integrated oversight of quality and timelines from concept through completion. OEM solutions available upon request.



MeridianKiosks.com

sales@mzero.com

+1 866.454.6757

MERIDIAN

G3 Countertop

Dimensions (22" Unit)

+ Height: 17.2"
+ Width: 20.4"
+ Depth: 9.9"
+ Base Plate: 9.9" x 16"
+ Weight: ~50 lbs

Landscape and portrait orientation available

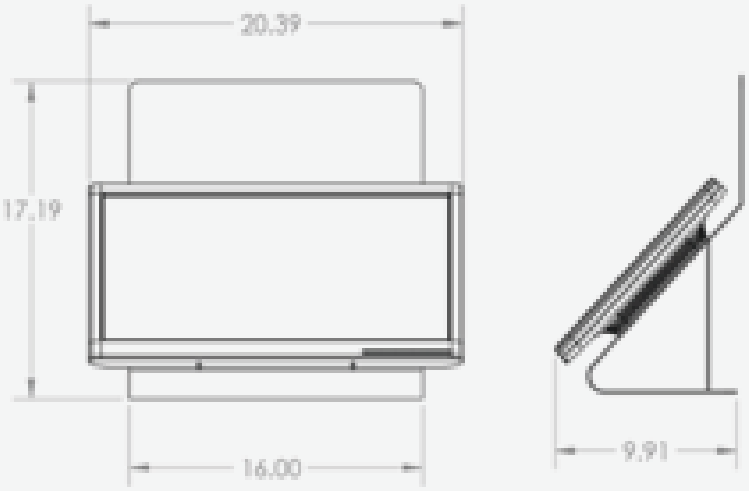

Power

+ 120 Volt | 20 AMP | 50/60 Hz
+ International power available

Construction

+ Durable steel enclosure
+ Powder coat finish
+ ADA Compliant

Quality & Certification

AMTIVO
ISO 9001:2015 Certified
Quality Management

Meridian promises a level of quality that goes beyond expectation. We control every step of the process from concept to completion, overseeing quality, design, cost and timelines.



Finish Options

+ Black | Silver | White
+ Custom Pantone color matching
+ Full-Color Lexan Laminated Graphics

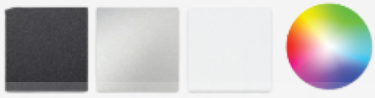



MeridianKiosks.com
sales@mzero.com
+1 866.454.6757
OEM