ISERIES

MERIDIAN

Bill Collection Solution



Designed for seure unattended payments

Built for flexibility, the Meridian iSeries is one of our most customizable payment kiosks, designed to accommodate a wide range of components. Its sleek, versatile design and convenient front-access features simplify service and maintenance while supporting seamless integration of payment, printing, scanning, and other essential components. Ideal for a variety of industries and deployment environments.

Components Available

- Bill Acceptor
- HD Camera
- Barcode Scanner
- Rugged Keyboard
- Wi-Fi/Cellular
- Printer Options
- Overhead Display
- Proximity Sensor

Display Options



17" 19" 22"

Keyboard

Printer

Scanner Integration

HD Camera

Payment Ready

Designed in the USA. Controlled End-to-End.

Meridian designs and engineers every solution in-house, with integrated oversight of quality and timelines from concept through completion. OEM solutions available upon request.

MeridianKiosks.com

sales@mzero.com

+1 866.454.6757

MERIDIAN

iSeries

Dimensions (22" Unit)

+ Height: 75.2"
+ Width: 28"
+ Depth: 16.25"
+ Base Plate: 28" x 16.25"
+ Weight: ~270 lbs

Landscape and portrait orientation available

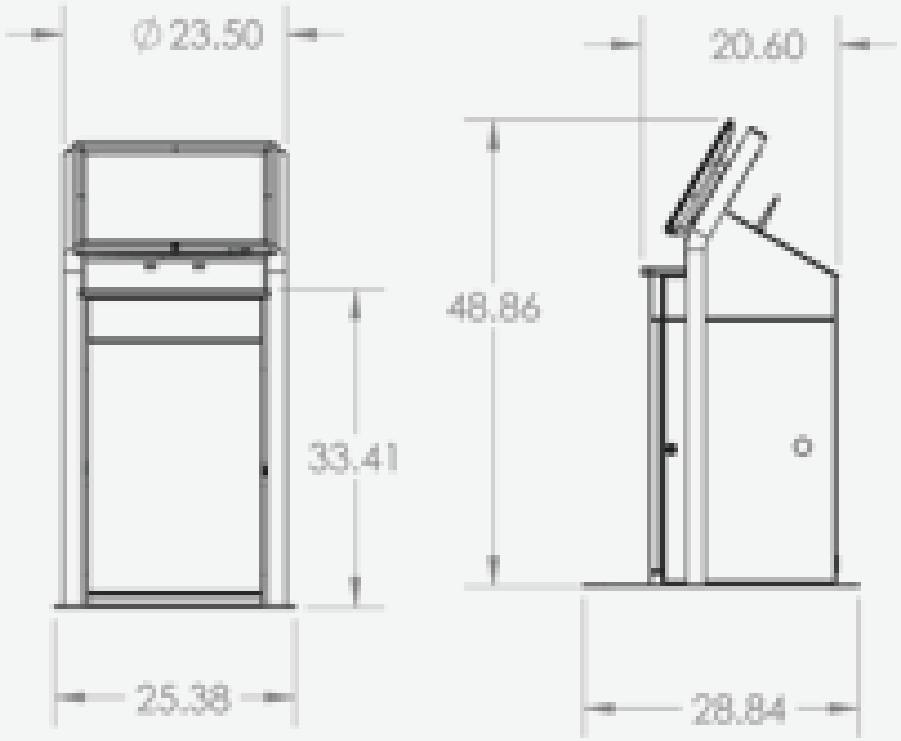

Power

+ 120 Volt | 20 AMP | 50/60 Hz
+ Internal surge protection
+ International power available

Construction

+ Durable steel enclosure
+ Powder coat finish
+ Standard security locks
+ Front access

Quality & Certification

AMTIVO ISO 9001:2015 Certified Quality Management

Meridian promises a level of quality that goes beyond expectation. We control every step of the process from concept to completion, overseeing quality, design, cost and timelines.

Finish Options

+ Black | Silver | White
+ Custom Pantone color matching
+ Full-Color Lexan Laminated Graphics



MeridianKiosks.com | sales@mzero.com | +1 866.454.6757 | OEM