NAVIGATOR

MERIDIAN

Signature Interactive Kiosk



Navigate with Confidence

As Meridian's signature interactive directory and wayfinding kiosk, the Navigator combines a sophisticated design with versatile component integration. Its distinctive angled screen creates an engaging, user-friendly experience, making it easy for visitors to access information, and navigate their surroundings.

Components Available

- WiFi / Cellular
- Overhead DIsplay
- Rugged Keyboard
- Barcode Scanner
- Proximity Sensor

Display Options



32" 43" 55"

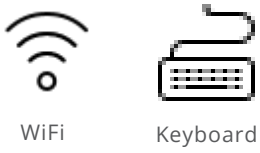

Designed in the USA. Controlled End-to-End.

Meridian designs and engineers every solution in-house, with integrated oversight of quality and timelines from concept through completion. OEM solutions available upon request.

MeridianKiosks.com

sales@mzero.com

+1 866.454.6757

MERIDIAN

Navigator

Dimensions (32" Unit)

+ Height: 59.4"
+ Width: 30"
+ Depth: 24"
+ Base Plate: 30" x 24"
+ Weight: ~190 lbs

Landscape and portrait orientation available

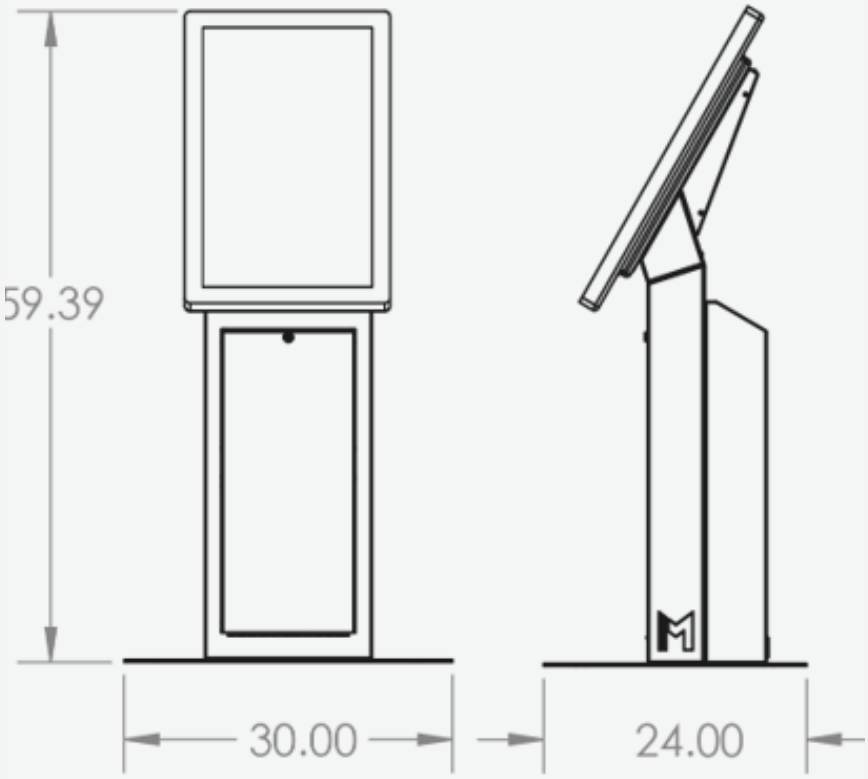

Power

+ 120 Volt | 20 AMP | 50/60 Hz
+ Internal surge protection
+ International power available

Construction

+ Durable steel enclosure
+ Powder coat finish
+ Security locks, front access

Quality & Certification

AMTIVO ISO 9001:2015 Certified Quality Management

UL

Meridian promises a level of quality that goes beyond expectation. We control every step of the process from concept to completion, overseeing quality, design, cost and timelines.

Finish Options

+ Black | Silver | White
+ Custom Pantone color matching
+ Full-Color Lexan Laminated Graphics

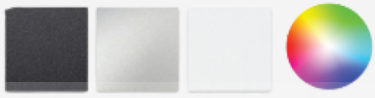



MeridianKiosks.com

sales@mzero.com
+1 866.454.6757

OEM