RTS

MERIDIAN

Flexible, Customizable Self-Service



Designed for a wide range of industries

Designed for flexibility, the interactive RTS offers extensive component versatility in a sleek, sophisticated form. Available in standard or ADA height and featuring convenient front access, the RTS can be configured to support a variety of self-service applications. Its adaptable design fits seamlessly into corporate environments, retail spaces, and customer-facing locations.

Scanner Integration

HD Camera

Payment Ready

Printer

WiFi

Keyboard

Components Available

Payment Terminal
Bill Acceptor
Printer Options
WiFi / Cellular
HD Camera
Barcode Scanner
Rugged Keyboard
HD Camera

Display Options



17" 19" 22" 32"

Designed in the USA. Controlled End-to-End.

Meridian designs and engineers every solution in-house, with integrated oversight of quality and timelines from concept through completion. OEM solutions available upon request.

MeridianKiosks.com

sales@mzero.com

+1 866.454.6757

MERIDIAN

The RTS

Dimensions (32" Unit)

+ Height: 67.2"
+ Width: 24.25"
+ Depth: 26.25"
+ Base Plate: 24.25" x 26.25"
+ Weight: ~155 lbs

Landscape and portrait orientation available

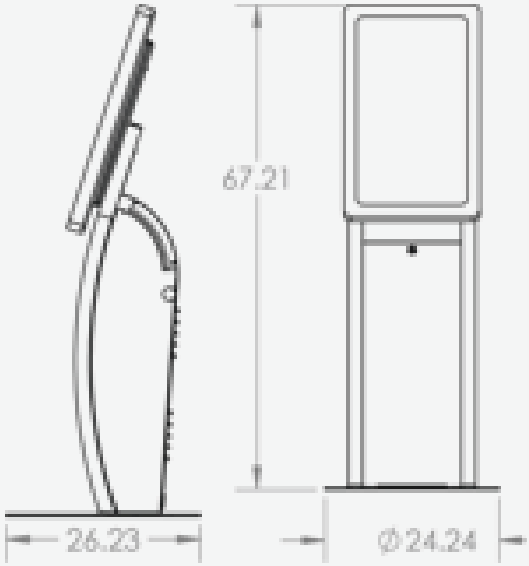

Power

+ 120 Volt | 20 AMP | 50/60 Hz
+ Internal surge protection
+ International power available

Construction

+ Durable steel enclosure
+ Powder coat finish
+ Security locks, front access
+ ADA compliant

Finish Options

+ Black | Silver | White
+ Custom Pantone color matching
+ Full-Color Lexan Laminated Graphics

ADA Compliant Design

In order to stay within ADA Compliance, for height requirements, some screen configurations will require content adjustments. This is available with Mzero Software.

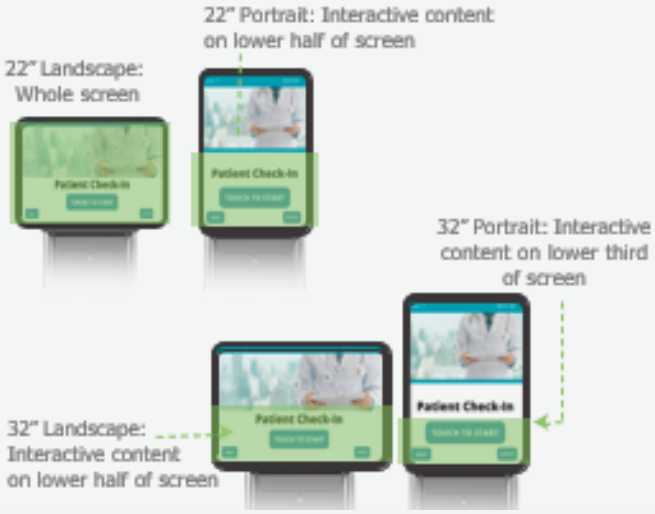

Quality & Certification

ISO 9001:2015 Certified

Meridian promises a level of quality that goes beyond expectation. We control every step of the process from concept to completion, overseeing quality, design, cost and timelines.



MeridianKiosks.com | sales@mzero.com | +1 866.454.6757 | OEM