MERIDIAN

OUTDOOR VIC

Outdoor Virtual Information Center



Outdoor

WiFi

HD Camera

Proximity Sensor

Payment Terminal

Barcode Scanner

Designed for Year-Round Weather

Featuring a fully welded aluminum chassis and integrated temperature-control components, the Outdoor VIC is engineered for reliable, year-round operation in demanding weather conditions. With a range of optional features, including speakers and proximity sensors, the VIC delivers seamless self-service solutions designed to perform in even the toughest climates.

Components Available

- Proximity Sensor
- Audio Kit
- WiFi / Cellular
- Barcode Scanner
- Temp Controlled
- HD Webcam
- Payment Terminal
- ADA Navigation Pad
- ADA Audio Jack
- Braille

Available Screen Size
55"



Designed in the USA. Controlled End-to-End.

Meridian designs and engineers every solution in-house, with integrated oversight of quality and timelines from concept through completion. OEM solutions available upon request.

MeridianKiosks.com

sales@mzero.com
+1 866.454.6757

MERIDIAN

Outdoor VIC

Dimensions (55" Unit)

+ Height: 92"
+ Width: 41"
+ Depth: 14"
+ Base Plate: 41" x 14"
+ Weight: ~510 pounds

Portrait orientation available

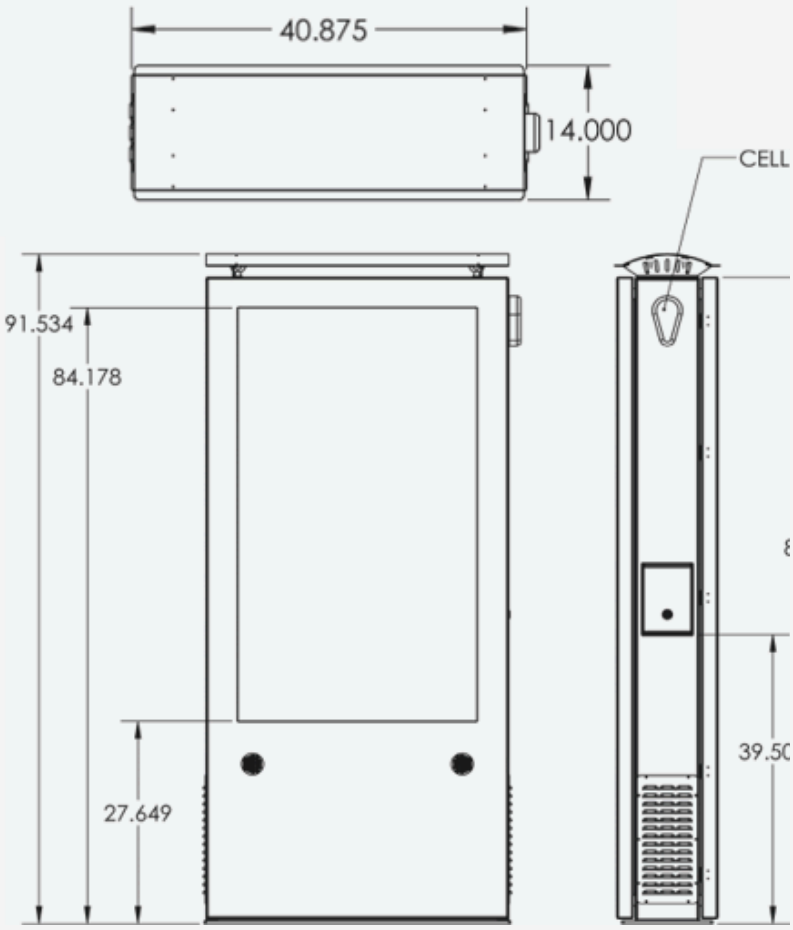

Power

+ Internal surge protection
+ Power conversion available

Construction

+ Aluminum frame & chassis
+ Powder coat finish
+ High security lock system
+ Tempered anti-reflective UV glass
+ Modular sides

Quality & Certification

AMTIVO
ISO 9001:2015 Certified
Quality Management

UL

Meridian promises a level of quality that goes beyond expectation. We control every step of the process from concept to completion, overseeing quality, design, cost and timelines.

Finish Options

+ Black | Grey | White
+ Custom Pantone color matching
+ Full-Color Lexan Laminated Graphics



MeridianKiosks.com
sales@mzero.com
+1 866.454.6757
OEM